INTERNATIONAL JOURNAL OF MICROWAVE AND OPTICAL TECHNOLOGY,

VOL.8, NO.1, JANUARY 2013

A 2.1 to 4.6 GHz Wideband Low Noise Amplifier Using ATF10136

M. Meloui* , I. Akhchaf*, M. Nabil Srifi** and M. Essaaidi*

(*)Electronics and Microwaves Group, Faculty of Sciences
Abdelmalek Essaadi University, Tetuan, Morocco.
Tel: +212661725992; Fax: +21239994500; E-mail: essaaidi@ieee.org
(**) Electronics and Telecommunication Systems Research Group, National School of Applied Sciences
Ibn Tofail University, Kenitra, Morocco
Tel: +212668918517; Fax:+212537374052 ; E-mail: srifimn@gmail.com

***Abstract*— This paper presents a novel low-noise amplifier (LNA) for the 2 to 4.6 GHz applications. The LNA uses a circuit topology consisting of two gain stages with two feedback loops using ATF technology. The noise figure of this LNA varies from 1.5 to 5.4 dB, and its gain varies from 5 to 13 dB throughout the operating frequency band.The S11 and S21 simulated and measured results are presented, and show good agreement.**

***Index Terms* — low noise amplifier, ATF-technology, feedback amplifier.**

I. INTRODUCTION

The Federal Communications Commission approved the use of UWB technology for commercial applications in the unlicensed 3.1–10.6GHz frequency range. The UWB technology, which is an ideal candidate for many applications due to the transmission and reception of the trains of short pulses having very low power, can achieve very good time and spatial resolutions [1]-[3].
For this reason, the use of the low noise amplifiers (LNAs) in UWB communication systems must balance the specification of bandwidth, linear high gain and low noise figure at low DC consumption [4]. A low noise amplifier (LNA) forms the first block that amplifies the desired band of signals without adding significant noise to the signal. The primary role of the LNA is to achieve large gain and low noise figure.

In this paper the feedback topology and Agilent Technologies which are candidates to degrade the noise figure and reduce the maximum power gain available from an active device. ATF-10136 is a high performance GaAs FET, and it is appropriate for use in the first stage of low noise amplifiers operating in the 0.5-12 GHz frequency range. The GaAs ATF-10136 MESFET technology is chosen because it is has an advantage in terms of the gain and the noise figure [4].

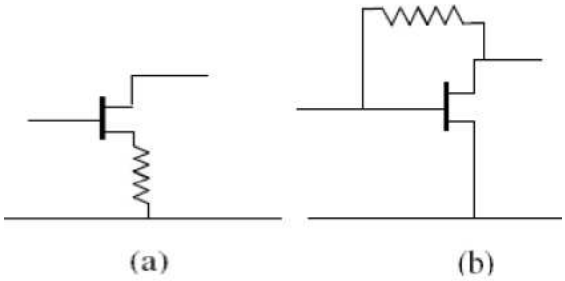

Fig.1: a) Series feedback, and b) parallel feedback

According to these requirements, this paper report the design of a two stage broadband low noise amplifier using GaAs MESFET ATF-10136 technology. To achieve wideband matching and load design, a few different topologies have been reported: a multi-section LC matching network LNA [5], a distributed LNA [6], and a resistive feedback or common-gate LNA [7], [8].The simulated results are done by using Agilent ADS commercial simulator.

II. WIDEBAND LNA CRITERIA DESIGN

The critical LNA parameters design are High gain, low noise figure and very wide band (2 GHz to 4.6 GHz). The proposed low noise tow stages gain amplifier is illustrated in fig.1. It consists on tow stages feedback amplifiers on ATF technologies and matching networks. The designed LNA is based on two-gain stages approach, where the first wideband gain stage is connected to the second wideband second stage via an inter-stage matching as shown in fig.1. In the first stage, the shunt feedback technique formed by the resistors R2, R3 and a capacitor C3, placed between the gate and the drain of the transistor Q1. The resistance value of

R2 is maximized to reduce its noise contribution for an acceptable input return loss. The resistor R1 affect largely the bandwidth, where: $R2 \rangle R1$. The first stage is optimized for acceptable low noise and gain. For this, an input matching network, formed

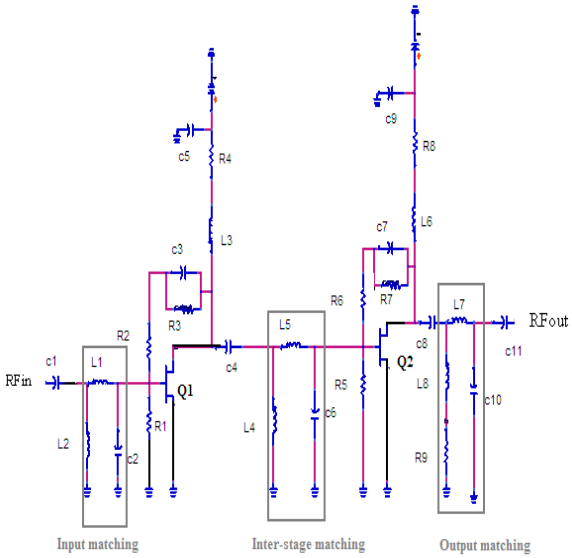

by inductors L1, L2 and a capacitor C2, is introduced.

Fig. 2 ADS schematic of the stages feedback LNA

Another important component is the capacitor C4, which contribute on the extension of the bandwidth and make flat gain. The capacitor C8 ensure the same impact in our design. Cascading a second stage that is formed with the same topology such the first stage. A shunt feedback resistors R6, R7 and capacitor C7 are connected between the drain and gate of transistor Q2. The resistor R6 has an impact on extension of bandwidth where : $R6 \rangle R5$. The first and second stages are matched via an inter-matching which is formed by an inductors L4, L5 and a capacitor C6 in Π-shaped structure. This allows good compensation for the noise figure (NF) and degradation of gain. The tow stage cascade architecture can be used at 1V.

III.LC-SECTION MATCHING NETWORK AND FEEDBACK TOPOLOGY

A. ΠΠ-Shaped LC-Matching

In the general case, the essential requirement to achieve maximum gain is a good matching network between the load and the source. The quality factor Q is the most important factor to construct the matching network [1]. It is defined as:

$$Q = \omega \frac{\text{Energy stored}}{\text{Avrege power dissipated}} \quad (1)$$

In our LNA design, to increase the bandwidth and maintain a flat gain as much as possible, three π-shaped LC-matching are used, i.e. input matching, inter matching and output matching networks. The π- shaped wide band matching topology is shown in fig.2.

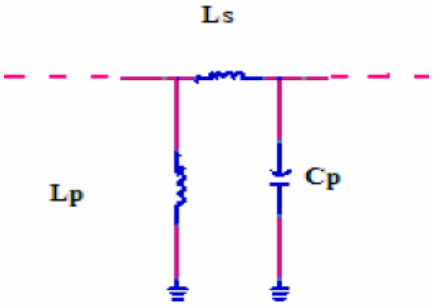

Fig .3 π-shaped matching network

B. Feedback Topology

Table I: Components design identification

Wideband LNAs have been frequently implemented

C1	C2	C3	C4	C5
50 pF	0.13 pF	25 pF	0.145 pF	0.1 pF
C6	**C7**	**C8**	**C9**	**C10**
0.155 pF	0.25 pF	0.21 pF	0.3 pF	0.01 fF
C11	**L1**	**L2**	**L3**	**L4**
5 pF	0.335 nH	55 nH	4 H	55 nH
L5	**L6**	**L7**	**R1**	**R2**
0.155 pH	0.1 H	4.2 nH	10 kΩ	100 kΩ
R3	**R4**	**R5**	**R6**	**R7**
50 Ω	1 kΩ	10 kΩ	100 kΩ	50 Ω
R8	**R9**	**Transistors : Q_1 and Q_2**		
1 kΩ	75 kΩ	ATF-10136		

in feedback topologies [7], [9]. The requierement criteria LNA design, an ultra wideband width and a flat gain, can be met using a feedback topology. This technique have been largely used for amplifiers design aver an octave bandwith. On the other hand, the feedback technique seems to be the best solution due to their adventages, especially it can be used in the broadband amplifiers to control gain flatness and reduce the input and output VSWR at the same time, and to make the circuit more robust, and to degrade the noise figure and control the extension bandwidth of the amplifier [3]-[5] .

INTERNATIONAL JOURNAL OF MICROWAVE AND OPTICAL TECHNOLOGY,

VOL.8, NO.1, JANUARY 2013

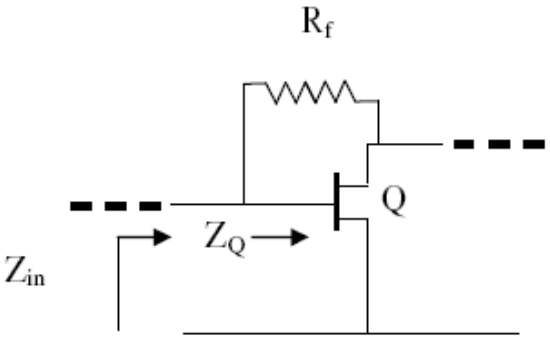

Fig .4 Diagram of a shunt feedback topology

In general case of the shunt feedback topology shows in fig .3, the input impedance is given by :

$$Z_{in} = \frac{R_f}{1+G+\frac{R_f}{Z_Q}} \qquad (2)$$

And if we ignore the input impedance of the basic amplifier when $|ZQ| >> |Rf|$, the input impedance is given as :

$$Z_{in} = \frac{R_f}{1+G} \qquad (3)$$

And the gain G will be chosen when:

$$Z_{in} = R_s \qquad (4)$$

In our design, the first stage is formed by the transistor Q_1, and based on the shunt feedback topology shown in fig.4.a) via the resistors $R_{f1,}$ and R_1, where:

$$R_{f1} = R2 + \left(R3 \,//\, \frac{1}{j\omega c_3} \right) \qquad (5)$$

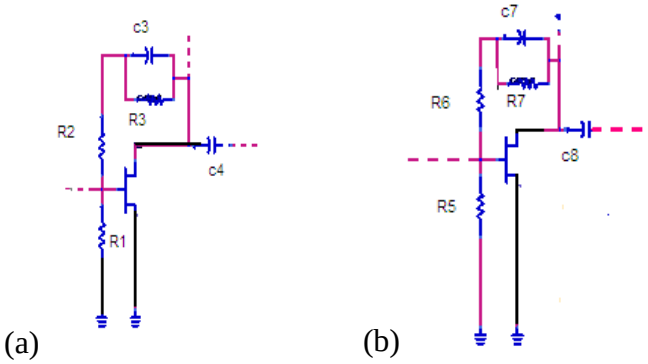

Fig .5 Feedback topology, (a) first-stage feedback amplifier Q1, (b) second–stage feedback amplifier Q_2.

The second stage consists on a transistor Q2 and the shunt feedback loops via resistors Rf_2 and R_5, as shown in fig.4.b):

$$R_{f2} = R6 + \left(R7 \,//\, \frac{1}{j\omega C7} \right)$$

III. EXPERIMENTAL AND SIMULATED RESULTS

The designed LNA was fabricated and mounted on FR4 substrate (εr=4.4). The back of the substrate was covered with copper. Fig.7 shows the photograph of the prototype of the proposed LNA. Fig.5 shows the simulated scattering (S) parameters (S21 and S11). The poor match between simulated and measured S11 parameters is due to the power of the amplifier, which has been polarized 5V, whereas ADS simulator is not based on the polarization in S11 and S21 calculation. The measured S11 parameters, plotted in fig.6, are less than -10 dB from 2 to 4.6GHz. It is minimal at 4.5 GHz with - 40 dB. The measured gain of the proposed LNA is maximal around nominal 13dB at 2.5 GHz and rolls off to 7 dB at 4.6 GHz. The noise figure of the amplifier is less than 3.6 from 2 to 4.6 GHz, and less than 4 dB from 2 GHz to 6 GHz as shown in Fig. 9.

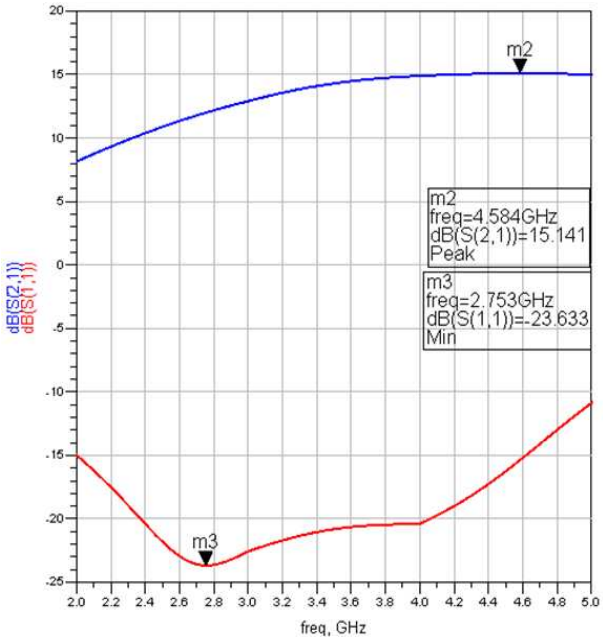

Fig.6: Simulated S21 and S11 of the LNA

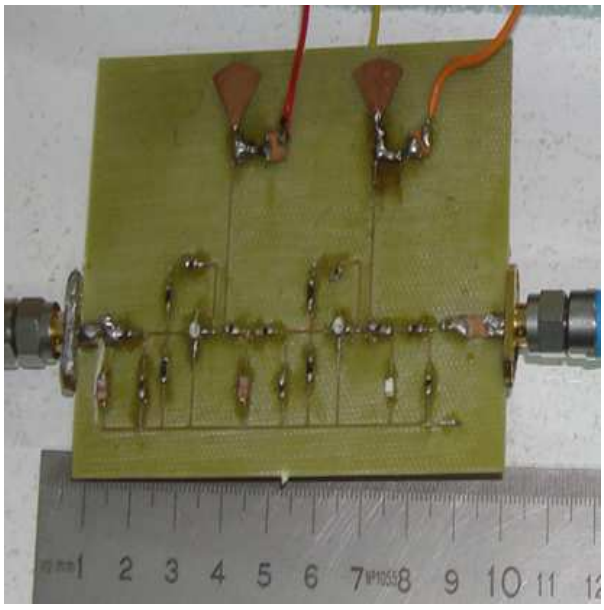

Fig.8: The photograph of the proposed LNA.

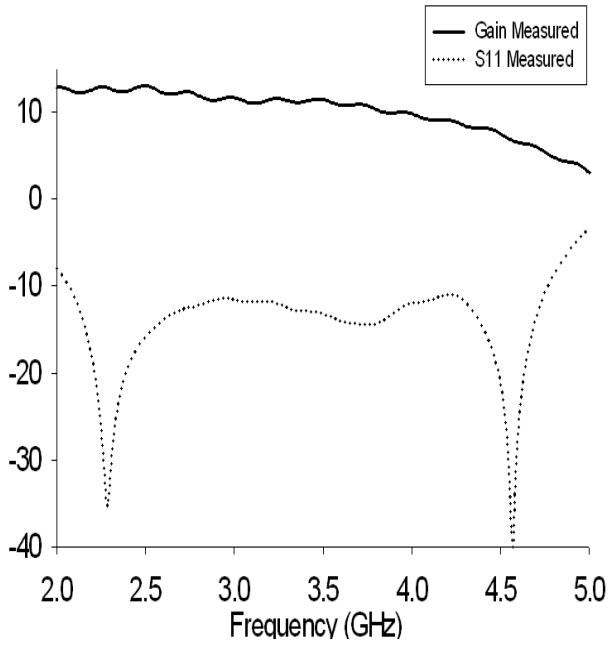

Fig.7: Measured gain and S11 of the proposed LNA

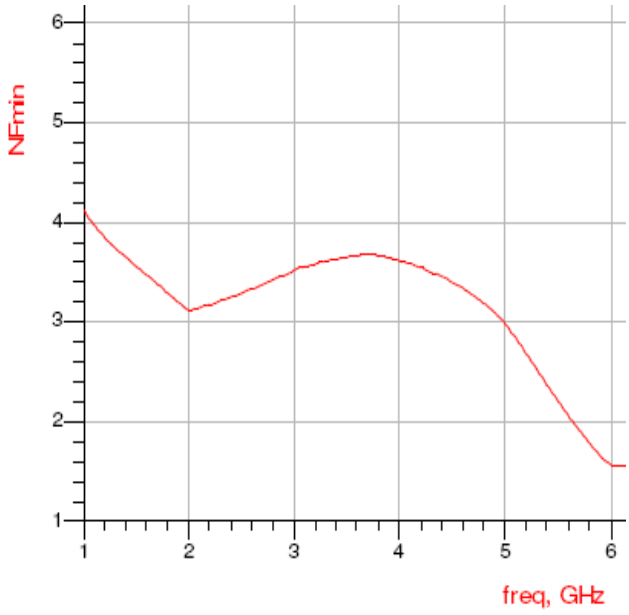

Fig.9: Simulated noise figure (NF) of the proposed LNA.

works	Topology	Technology	Bandwidth (GHz)	S_{21} (dB)	NF (dB)
[5]	Band-pass Chybychev	0.18-µm CMOS	*2.3-9.2*	*9.3*	*4.2-9.2*
[10]	*Distributed*	0.18-µm CMOS	*DC-14*	*10.6*	*3.4-5.2*
[10]	*Distributed*	0.18-µm CMOS	*DC-22*	*7.3*	*4.3~6.1*
[11]	Feedback	0.18-µm CMOS	*2.0-4.6*	*9.8*	*2.3~4.0*
[1]	*Distributed*	0.18-µm CMOS	*0.03-6.3*	*8.6*	*4.2~6.2*
[2]	Feedback	0.18-µm CMOS	*3-6*	*16*	*4.7~6.7*
[3]	*Distributed*	0.18-µm CMOS	*2.7-9.1*	*10*	*3.8~6.9*
[4]	Two stages Feedback	ATF-10136 ATF-34143	*3.6-4.2*	*21*	*1.1*
This Work	Two stages Feedback	ATF-10136	2.1-4.6	7~13.6	<3.6

Table II: Comparison the proposed amplifier to some previous LNA design Works

The performances of the proposed LNA are summarized and compared with previous works in Table II. The proposed LNA is characterized with its flat gain, its wide bandwidth, and low cost of manufacture.

IV. CONCLUSION

A novel wideband low noise amplifier (LNA) for 2.1 GHz to 4.6 GHz applications was designed. The LNA utilizes an improved shunt feedback topology exploited in a tow stage amplifier and a three π-shaped broadband LC-matching networks. The proposed LNA was implemented on a FR4 substrate using ATF-10136. It achieves NF lower than 3.6 dB over the entire desired band, and S11 less than -12 dB, and S21 larger than 7dB from 2.1 to 4.6 Ghz. This LNA presents a good candidate for mobile and wireless communication applications.

REFERENCES

[1] F. Zhang and P. Kinget, "Low power programmable-gain CMOS distributed LNA for ultra-wideband applications," in IEEE Symp. VLSI Circuits Symp. Dig., Jun. 2005, pp. 78–81.

[2] C.-P. Chang and H.-R. Chuang, "0.18 _m 3–6 GHz CMOS broadband LNA for UWB radio," Electron. Lett., vol. 41, no. 12, pp. 696–698, Jun. 2005.

[3] Yueh-Hua Yu, Yi-Jan Emery Chen, "A 0.6-V Low Power UWB CMOS LNA," IEEE Microwave And Wireless Components Letters, Vol. 17, No. 3, March 2007

[4] Y. Wei-ming; H. Li-ping; Y. Bin; X. Wan-bo; S. Chen; C. Jian-xin, "The Design of 3.6GHz 4.2GHz Low Noise Amplifier," in IEEE 2007 International Symposium on Microwave, Antenna, Propagation, and EMC Technologies For Wireless Communications, Aug. 2007, pp. 458 – 461.

[5] A. Bevilacqua and A. M. Niknejad, "An ultrawideband CMOS lownoise amplifier for 3.1 - 10.6 GHz wireless receiver," IEEE J. Solid-State Circuits, vol. 39, no. 12, pp. 2259–2268, Dec. 2004.

[6] F. Zhang and P. R. Kinget, "Low-power programmable gain CMOS distributed LNA," IEEE J. Solid-State Circuits, vol. 41, no. 6, pp. 1333– 1343, Jun. 2006.

[7] J.-H. C. Zhan and S. S. Taylor, "A 5GHz resistive-feedback CMOS LNA for low-cost multi-standard applications," in IEEE ISSCC Dig. Tech. Papers, Feb 2006, pp. 200–201.

[8] S. C. Blaakmeer et al., "An inductorless wideband balun-LNA in 65nm CMOS with balanced output," in Proc. IEEE European Solid-State Circuits Conf., Sep. 2007, pp. 364–367.

[9] J. Borremans et al., "An ESD-protected DC-to 6GHz 9.7mW LNA in 90nm digital CMOS," in IEEE ISSCC Dig. Tech. Papers, Feb 2007, pp. 422–423.

[10] R. C. Liu, "Design and analysis of DC to 14 GHz and 22 GHz CMOS cascode distributed amplifier," IEEE J. Solid-State Circuits, vol. 39, no. 8, pp. 1370–1374, Aug. 2004.

[11] C.-W. Kim, M.-S. Kang, P. T. Anh, H.-T. Kim, and S.-G. Lee, "An ultra-wideband CMOS low noise amplifier for 3–5-GHz UWB system," IEEE J. Solid-State Circuits, vol. 40, no. 2, pp. 544–547, Feb. 2005.